IQ/MLC2® Specification Submittal

Models

IQ/MLC2 Standard 120VAC
Stock No. IML2 120V ST SP

UL325
CSA 22.2 No. 247

IQ/MLC2 Standard 230VAC
Stock No. IML2 230V ST SP

IQ/MLC2-8 120VAC with 4-Motor Expander Card
Stock No. IML2 4MTR 12 AS

IQ/MLC2-8 230VAC with 4-Motor Expander Card
Stock No. IML2 4MTR 23 AS

Features

- Four-motor, networked shade controller operates motorized shades equipped with standard line-voltage motors.
- Provides four (4) DIP-switch configurable local control ports, which permit control of any combination of the four motors within the controller via dry contact.
- Reprogramming of local control port motor assignments is possible through DIP switches with out needing to access the motor.
- Master control port offers dry-contact group control of all four internal motors.
- Master control port enables control, via daisy chaining, of up to 250 IQ/MLC2 units or 1,000 motors (2,000 motors if using the optional 4-Motor Expander Daughter Card).
- Control ports offer one-touch shade positioning to five (5) alignment points, including three (3) mid-window presets.
- Control ports can provide power to low-voltage control accessories up to 18VDC, 300mA total.
- Preset positions default to 25%, 50%, and 75% of the shade height but are programmable to offer hem bar alignment across windows of different sizes.
- Uniform mode forces groups of shades to operate to predetermined alignment points.
- Switch personality selection enables operation of shades from 1-button, 2-button, and 3-button switches

- Ease of use
  - Removable, two-piece line-voltage terminal block connectors.
  - Troubleshooting LEDs.
- Integrated RS485 half-duplex, CSMA-CA communication network expands control options:
  - Allows up to 250 nodes per network.
  - Enables two-way communication.
  - Uses standard Cat-5 network cable.
- Integration capability with third-party devices via RS232 and dry-contact; requires no additional interface devices.
- Automation port offers daylighting control using photosensors and scheduler-based operation, as well as remote control using IR and RF wireless controls.
- Modular expansion port enables control of up to four (4) pairs of motors using the IQ/MLC2 4-Motor Expansion Card.
- Brownout protection protects against memory loss and unreliable operation during low-line conditions.
- Flash-upgradable firmware promote flexibility for custom requirements and future enhancements.
- ETL listed to UL 325.
- CSA 22.2 No. 247 compliant.

FRASERSHADING SYSTEMS
MechoSystems Design with light.™
Unit 101-5219 192nd St. Surrey, BC, Canada, V3S 4P6 | Phone: 604-881-4881 | Fax: 604-881-4882

IQ/MLC2 Electrical Specifications

DANGER: Must be installed by a qualified electrician according to all applicable codes and regulations.

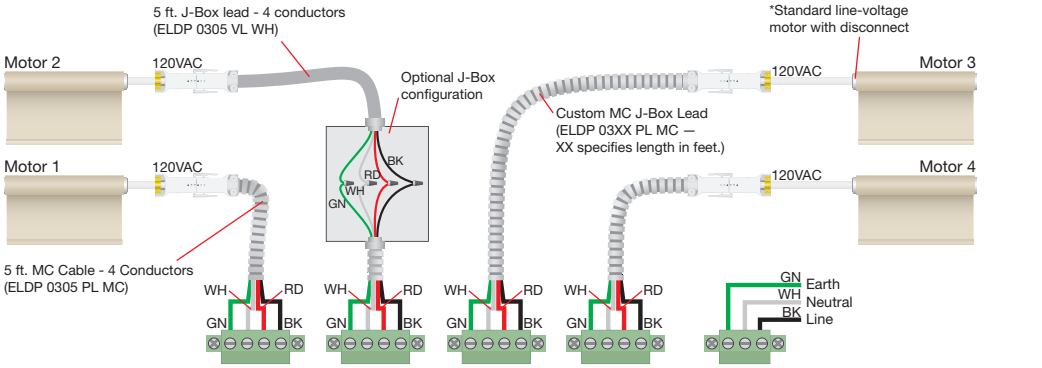

Power ouputs M1–M4
- 12–18AWG
- 120VAC, 60Hz, 0.3–5A (motor dependent)
- 230VAC, 50Hz, 0.15–2.4A (motor dependent)

Power input
- 12–18AWG
- 120VAC, 60Hz, 0.5–20A (motor dependent)
- 230VAC, 50Hz, 0.25–9.8A (motor dependent)

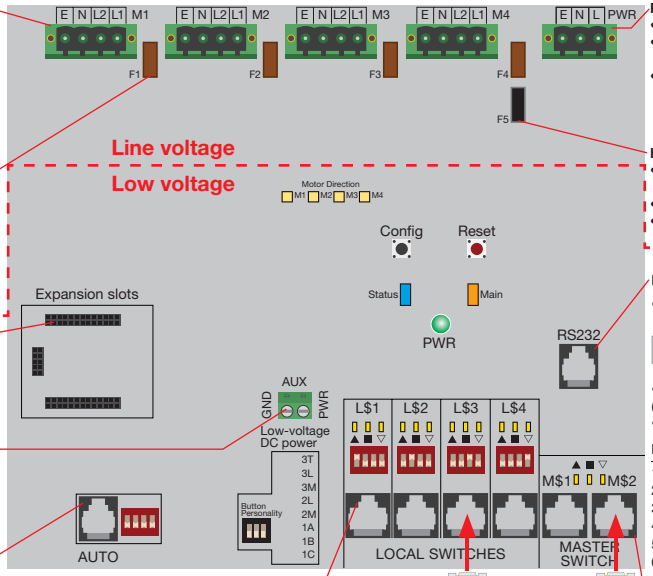

Output fuses F1–F4 (Brown)
- Rating: 250VAC, 3.15A, Slow blow
- MFG: Littelfuse
- P/N: TE5 -392-1315-0000

Input fuse F5 (black)
- Rating: 250VAC, 200mA, time lag
- MFG: Bel fuse
- P/N: RST-200

Daughtercard attachment for future functionality

RS232 port
- RJ12

- Modular cable (Olympic 3746-26)
- 25 ft. max.

PIN	Color	Function
1	WH	N/C
2	BK	DB9 COM (6N)
3	RD	DB9 RX (DB9:Pin2)
4	GN	DB9 COM (DB9:Pin5)
5	YW	DB9 TX (DB9:Pin3)
6	BL	N/C

Aux power port
- 18–24AWG
- 18VDC, 0.3A

PIN	Function
1	GND
2	PWR

Auto port
- RJ12

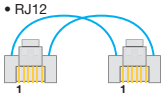

- USOC crimp
- Modular cable (Olympic 3746-26) OR Cat-3/5/6 cable
- 400 ft. max. cumulative

PIN	Color Cat-5	Color mod. cable	Function
1	WH/GN	WH	UP
2	WH/OR	BK	DOWN
3	BL	RD	PWR
4	WH/BL	GN	GND
5	OR	YW	N/C
6	GN	BL	N/C

Local switch ports L$1–L$4
- RJ45

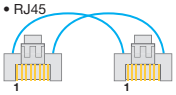

- USOC crimp
- Cat-5/6 cable
- 400 ft. max. cumulative

PIN	Color	Function
1	WH/BN	N/C
2	WH/GN	PWR
3	WH/OR	GND
4	BL	UP
5	WH/BL	MID
6	OR	DN
7	GN	FEEDBACK
8	BN	N/C

5-position switch

To next IQ/MLC2

Master switch ports M$1–M$2
- RJ45
- USOC crimp
- Cat-5/6 cable
- 400 ft. max. node-to-node*
- 4,000 ft. max. cumulative
- 250 nodes max.
- M$1 connects to M$2 on the next node

PIN	Color	Function
1	WH/BN	Net A
2	WH/GN	PWR
3	WH/OR	GND
4	BL	UP
5	WH/BL	MID
6	OR	DN
7	GN	FEEDBACK
8	BN	Net B

* A node is a serial device such as IQ/MLC2, intelligent switch, etc.

FRASERSHADING SYSTEMS

MechoSystems Design with light.™

Unit 101-5219 192nd St. Surrey, BC, Canada, V3S 4P6 | Phone: 604-881-4881 | Fax: 604-881-4882

IQ/MLC2 Mechanical Specification

Packaging	Wall-mount
Mechanical	
Size	10 x 10 x 4 in. (25.4 x 25.4 x 10.16cm)
Weight	7.5 lbs. (3.4kg)
Environmental	
Enclosure	NEMA 1
Temp	0-40° C.
Humidity	< 90% relative humidity, non-condensing

Dimensions and Mounting

Box mounting diagram

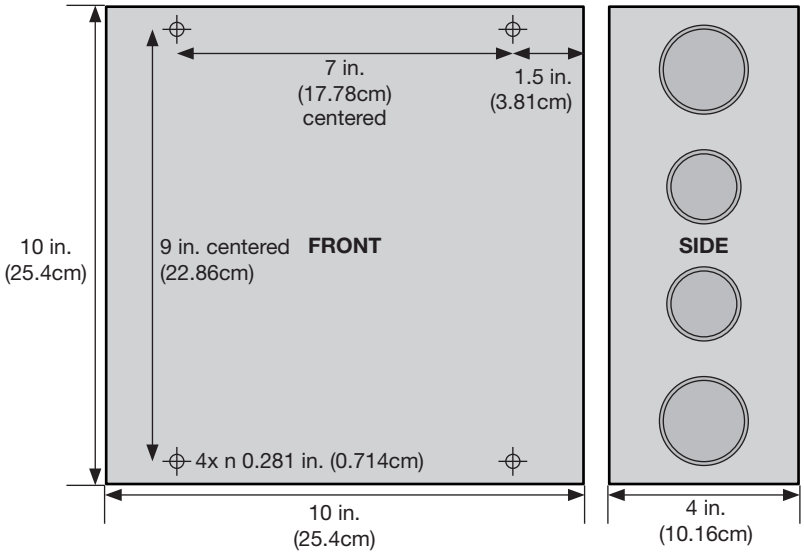

Unit 101-5219 192nd St. Surrey, BC, Canada, V3S 4P6 | Phone: 604-881-4881 | Fax: 604-881-4882

IQMLC2 system diagram

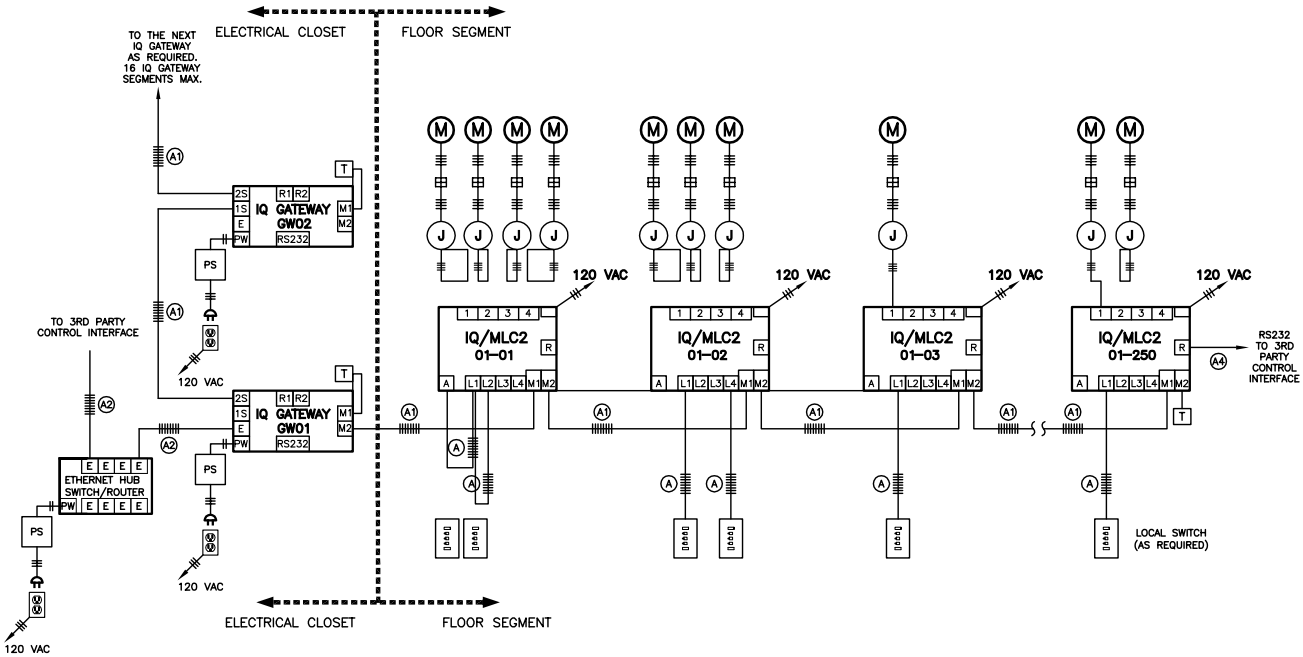

LOW VOLTAGE CABLE LEGEND

A	CAT5/6E – FOR LOW VOLTAGE DRY CONTACT CONNECTIONS 24AWG 4UTP (8–CONDUCTOR STRANDED UNSHIELDED TWISTED PAIR) OLYMPIC WIRE AND CABLE (www.olympicwire.com 1–800–526–2269) PART No. 3078M5FH. TERMINATION: RJ–45 MODULAR PLUG CRIMPED (USOC) ON BOTH ENDS CAT5/6E – FOR LOW VOLTAGE DRY CONTACT CONNECTIONS IN PLENUM AREAS 24AWG 4UTP (8–CONDUCTOR SOLID UNSHIELDED TWISTED PAIR) OLYMPIC WIRE AND CABLE (www.olympicwire.com 1–800–526–2269) PART No. 3604M55 SOLID CONDUCTOR RJ–45 MODULAR PLUGS CRIMPED (USOC) ON BOTH ENDS DISTANCE LIMITATION: 400' CUMULATIVE (FURNISHED & INSTALLED BY OTHERS)	A1	CAT5/6E – CABLE FOR RS–485 CONNECTIONS 24AWG 4UTP (8–CONDUCTOR STRANDED UNSHIELDED TWISTED PAIR) TERMINATION: RJ–45 MODULAR PLUGS CRIMPED (USOC) ON BOTH ENDS. DISTANCE LIMITATION: 4000' CUMULATIVE (FURNISHED & INSTALLED BY OTHERS)
		A4	CAT5/6E – CABLE FOR RS–232 CONNECTIONS 24 AWG 3UTP (6–CONDUCTOR STRANDED UNSHIELDED TWISTED PAIR) TERMINATION: RJ–12 MODULAR PLUGS CRIMPED (USOC) ON BOTH ENDS CONNECTED TO DB–9/RJ–12 ADAPTOR (BY OTHERS) DISTANCE LIMITATION=25' CUMULATIVE (FURNISHED & INSTALLED BY OTHERS)

NOTES

1. PARALLEL WIRING TO NEXT DEVICE PER BRANCH CIRCUIT CAPACITY. ALL CONNECTION MUST MEET NATIONAL AND LOCAL CODES AND REGULATIONS.
2. ADDRESS SCHEDULES REQUIRED.
3. MAXIMUM VOLTAGE FOR ALL UNMARKED CABLE IS 43.5 VDC.

IQMLC2 Point-to point diagram

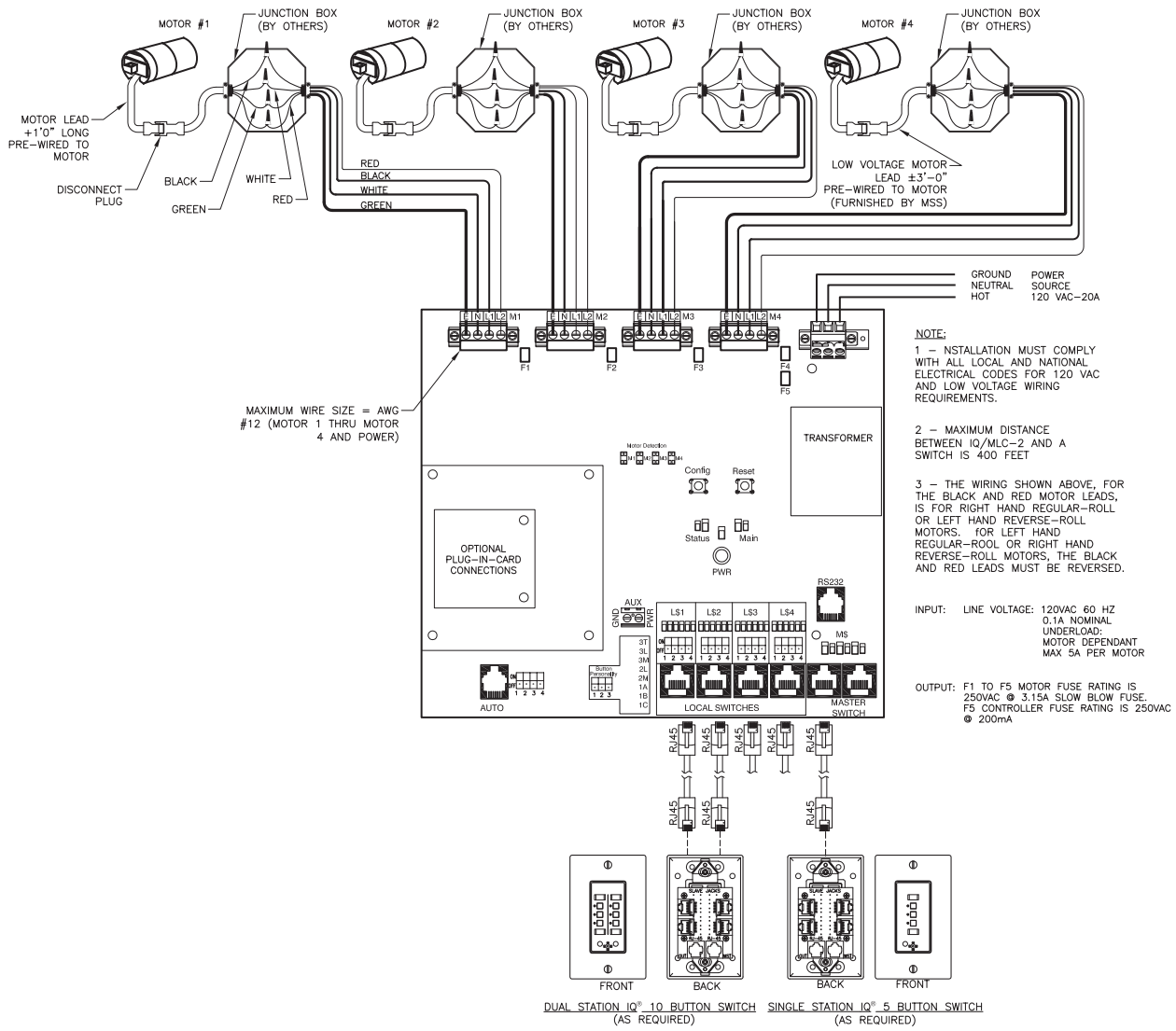

NOTE:

1 – NSTALLATION MUST COMPLY WITH ALL LOCAL AND NATIONAL ELECTRICAL CODES FOR 120 VAC AND LOW VOLTAGE WIRING REQUIREMENTS.

2 – MAXIMUM DISTANCE BETWEEN IQ/MLC-2 AND A SWITCH IS 400 FEET

3 – THE WIRING SHOWN ABOVE, FOR THE BLACK AND RED MOTOR LEADS, IS FOR RIGHT HAND REGULAR-ROLL OR LEFT HAND REVERSE-ROLL MOTORS. FOR LEFT HAND REGULAR-ROOL OR RIGHT HAND REVERSE-ROLL MOTORS, THE BLACK AND RED LEADS MUST BE REVERSED.

INPUT: LINE VOLTAGE: 120VAC 60 HZ 0.1A NOMINAL UNDERLOAD: MOTOR DEPENDANT MAX 5A PER MOTOR

OUTPUT: F1 TO F5 MOTOR FUSE RATING IS 250VAC @ 3.15A SLOW BLOW FUSE. F5 CONTROLLER FUSE RATING IS 250VAC @ 200mA

Warranty:
Limited warranty on motors and electronics to be free of manufacturing defects in factory materials or workmanship for five years from the date of shipment.

Technical Support:
MechoSystems
T: +1 (718) 729-2020, x2006
E: techsupport@mechosystems.com
W: mechosystems.com

MechoSystems reserves the right to make improvements or changes to its products without prior notice. However, every attempt is made to ensure the information herein is accurate and up to date. Verify with the MechoSystems staff to confirm the product availability, latest specifications, and suitability for your application.